Commonwealth of Virginia
Next Generation 9-1-1

Henrico County
PSAP/GIS Specific
NG9-1-1 Migration Proposal

November 1, 2018

www.vita.virginia.gov

Executive Summary

This migration proposal is being prepared for the **Henrico County PSAP** based on the Fairfax County contract with **AT&T**. **Tom McLaughlin** shall be the primary contact.

The Commonwealth has been discussing and planning for next generation 9-1-1 (NG9-1-1) for nearly a decade. With significant advances of the technology, capabilities and functionality of an NG network, now is the time to move from planning to implementation. The question is not if the Commonwealth should deploy NG9-1-1, but rather, how should the Commonwealth deploy NG9-1-1. There is no option for not deploying it. Since 9-1-1 is a local service, it is up to each locality to determine how they will move forward with NG9-1-1 deployment. To aid that decision, the 9-1-1 Services Board (the Board) adopted the Virginia NG9-1-1 Deployment Plan in January 2018. That plan proposed the methodology and process to guide the 9-1-1 Services Board and Commonwealth as a whole, through this deployment. Fortunately, localities in the Commonwealth are able to leverage a project in Northern Virginia for both lessons learned and a procurement vehicle that will make the process significantly easier. Though the Board is recommending the Fairfax County contract with AT&T for NG9-1-1 services since it was awarded through a competitive process, each locality will need to determine the most appropriate path. The Board and VITA are positioned to provide assistance, and to assure a seamless, unified network.

Regardless of the locality's decision, all stakeholders in the 9-1-1 ecosystem must work together on deployment. A primary goal of NG9-1-1 is to ensure calls and information received in one locality can be transferred to any surrounding locality even if it is to another state. Accomplishing that will require continual coordination, communications and cooperation among the stakeholders throughout the deployment process. The cost of failure is too high. Each stakeholder in the 9-1-1 ecosystem must work together and ensure a smooth transition to NG9-1-1.

A Migration Proposal is being developed for each locality (or groups of localities if served by a consolidated public safety answering point or PSAP) to provide information about the AT&T solution, prerequisite work needed within the PSAP and the expected costs and funding provided by the Board. The goal of this document is to provide each PSAP/locality with all of the information needed to evaluate the AT&T solution and determine whether it will meet the local needs. No locality should feel obligated to accept this proposal as they may use an appropriate procurement process for these services. This is simply to provide more information about services that are already available through an existing contract.

The Commonwealth's goal is to have all PSAPs fully deployed with the National Emergency Number Association (NENA) i3 standard. This standard states that all 9-1-1 calls are delivered to the PSAP on IP circuits with associated caller location data. If the equipment or GIS data in the PSAP is not capable of supporting the NENA i3 standard, interim solutions are available. These solutions allow calls to be delivered to the PSAP as IP, but then be converted back to analog for interface with the PSAP's systems. This interim solution established the PSAP's connection to the ESInet and will serve as the initial migration to NG9-1-1. After system and/or GIS data upgrades are complete the PSAP will be able to reach a full i3, NG9-1-1 environment. While AT&T will conduct a more exhaustive assessment after the PSAP executes a participation agreement, the review ISP performed for this proposal indicates that the **Henrico County** PSAP will be able to implement the full NENA i3 standard without the need for any interim or transitional steps. Some work on their GIS data will be required, but it should not impact the deployment schedule.

Solution Overview

AT&T is offering their Next Generation ESInet solution throughout Virginia as a solution that will facilitate a transition from legacy 9-1-1 networks to networks capable of supporting the growing demands of a mobile society. AT&T's solution supports key NENA i3 capabilities today, while forming the basis of a true NG9-1-1 platform that will support multimedia emergency services as standards are solidified in the industry.

The AT&T ESInet™ solution is a combination of a world class IP network and the NG9-1-1 components. Their ESInet solution (delivered as a service) comes complete with a full suite of advanced features, management services and tools to help ensure they provide the best possible service to each PSAP and ultimately the citizens they serve.

The AT&T ESInet™ solution provides the public safety community with an i3 architecture built from the ground up. AT&T's commitment to the NENA i3 standard is based on years of contributions to NENA standards committees and understanding the evolving needs and requirements of the Public Safety community. The AT&T solution is not just "i3 like," or "i3 aligned." As elements of the i3 standard continue to be ratified, updated and enhanced—AT&T will continue its commitment to i3. The AT&T ESInet™ services will provide Virginia everything needed to deliver the critical foundational components of an industry standard i3 solution delivered over the worlds most advanced IP network.

AT&T ESInet™ Included Features

- Initial build-out with expandable capacity
- Nationally distributed, geographically diverse and redundant service architecture
- Pre-deployed ESInet Call Processing Centers in AT&T datacenters across US
- Aggregation Centers (AGC) in AT&T Central Offices across the US to easily augment growth capacity
- Initial call processing capacity more than twice current US E9-1-1 call volumes
- NENA i3 compliant
- High availability design (99.999% availability)
- 6 core redundant architecture
- Redundant ALI database
- Interoperable with neighboring PSAPs
- Defense in depth security
- Text to 911 – National TCC Provider
- IPV6 capable
- Reporting Suite
- Full lifecycle management
- End to end management and monitoring
- Fully resourced team to install and support
- Full Business Continuity/Disaster Recovery organization
- Dedicated Program / Service Manager

The proposed solution provides a secure IP-based network with no single point of failure. With no single point of failure, the solution includes six ESInet data centers located at AT&T facilities throughout the country. The ESInet will provide the core for a robust emergency services IP network that assures call delivery. The AT&T solution enables call delivery into a legacy PSAP environment, an IP-enabled 9-1-1 PSAP, or to peer ESInets. AT&T and West Corporation have deep security and support provisions in

place. AT&T has demonstrated experience in cybersecurity. All of this is backed by AT&T's 24/7/365 Resolution Center, AT&T Labs, AT&T's world class project management and service delivery organizations.

Additional information about the AT&T solutions and the contract with Fairfax County can be found at: https://www.fairfaxcounty.gov/cregister/ContractDetails.aspx?contractNumber=4400007825

PSAP Call Handling Systems and Applications

Each PSAP system and application that interfaces with the 9-1-1 call must be assessed to determine if it will be compatible with NG9-1-1. This section of the migration proposal identifies each major system, assesses its readiness and outlines any upgrades that must or could be implemented with NG9-1-1.

Call Handling Equipment

Obviously, the PSAP's call handling equipment (CHE) is the primary system that interfaces with the 9-1-1 network. As such, it is likely the one that will require the deepest assessment and potential upgrades to operate with the NG9-1-1 network. CHE that is non-vendor supported (NVS) (or will become NVS during the transition period) or cannot be upgraded to be NG9-1-1 capable will be identified for replacement, but will be subject to the funding limits currently in place for the PSAP grant program ($150,000 individual or $200,000 shared services). This may also apply to technology refreshes of hardware due to becoming NVS or operating systems becoming end-of-support. The current CHE in the PSAP has been identified as:

- CHE manufacturer: **West**
- CHE model: **Viper**
- CHE version number (clients): **Power911 v6.1**
- CHE version number (server): **Viper 5.1.0.49**
- CHE maintenance provider (channel): **West**
- CHE Geodiversity: **Yes; Core A at the Henrico County PSAP. Core B is at the Richmond PSAP.**
- Number of positions: **31**
- SIP capable: **Yes**

This CHE has been determined to be i3 capable. The PSAP indicates the planned replacement of their CHE in **January 2022**. This is after the planned NG9-1-1 migration. Any new CHE will need to be tested and i3 functional on the AT&T ESInet.

Text to 9-1-1

Text to 9-1-1 can be deployed web-based on a separate computer or integrated with the CHE. While the former is typically at no cost, the latter tends to have a cost associated with it. Though text to 9-1-1 will be a base feature of NG9-1-1, the passage of Senate Bill 418 in the 2018 General Assembly requires all PSAPs to implement text to 9-1-1 by July 1, 2020. Prior to this requirement, **Henrico County** has implemented the direct IP solution for text to 9-1-1. No additional upgrade or change is required with the deployment of NG9-1-1.

Computer-Aided Dispatch

A computer-aided dispatch (CAD) system usually receives 9-1-1 location information (ALI) through an interface with the CHE. As a result, the change to NG9-1-1 should not have an impact on a CAD system. However, an assessment is made to determine if that is the case and if any options are available from the CAD vendor that could improve operations after NG9-1-1 is deployed. Any required upgrades would be funded through the Board, but any options to improve operations would be at the PSAP's expense.

Additionally, as a reminder, CAD system replacement is no longer funded through the PSAP grant program so PSAPs need to plan for its replacement locally. The current CAD system has been identified as follows:

- CAD vendor: **Henrico County IT**
- CAD software version: **CAD 24x7**
- CAD interfaces: **Yes**
- Method of data transfer: **CAT6 from CHE to serial converter**

This CAD system has been determined to not require any upgrade or modification with the deployment of NG9-1-1.

Mapping Display System

Similar to a CAD system, a mapping display system usually receives 9-1-1 location information (ALI) through an interface with the CHE or is part of the CHE or CAD. As a result, the change to NG9-1-1 should not have an impact on a mapping display system. However, an assessment is made to determine if that is the case and if any options are available from the mapping vendor that could improve operations after NG9-1-1 is deployed. The current mapping display system has been identified as follows:

- Dispatch Mapping Vendor: **Henrico County IT**
- Dispatch Mapping Software Version: **CAD 24x7**
- Method of data transfer: **CAT6 from CHE to serial converter**

This CAD system has been determined to not require any upgrade or modification with the deployment of NG9-1-1.

Voice Logging and Recording

Typically, the audio recorded by a voice logging recorder is generated by the CHE. Though not a best practice, it is possible to record audio directly from the incoming 9-1-1 trunks so an assessment must be performed to ensure that audio from 9-1-1 calls will still be recorded after the deployment of NG9-1-1. The current logging system has been identified as follows:

- Logging Recorder Vendor: **NICE**
- Logging Recorder Model: **Inform**
- Logging Recorder Software Version: **7.2.0.206 UP5**
- Audio Origination Point: **Most 9-1-1 and administrative lines are position based. Some non 9-1-1 are recorded by VOIP. All radio traffic is recorded at the trunk**

It is important to note that with an IP connection, audio is not present on the circuit until the CHE responds with an answer code. This is usually not until it is answered by a call taker, though it could be earlier if an audio message is played for the caller (which technically requires the CHE to answer the call to play the message). This voice logging recorder system has been determined to not require any upgrade or modification with the deployment of NG9-1-1.

Data Analytics

Though the ECaTS data analytics application is provided to all PSAPs by the 9-1-1 Services Board, some PSAPs still use a second application, native to the CHE, for data analytics in the PSAP. While the Board will directly fund the upgrade to ECaTS to handle NG9-1-1, the local data analytics application may also need to be upgraded. The current data analytics application has been identified as follows:

- Primary Data Analytics System: **Both ECaTS and PowerMIS are used equally.**
- Data Analytics Vendor: **ECaTS and West**

PowerMIS will soon be end-of-life and West will be migrating to the ECaTS platform as their primary MIS. The PSAP may want to consider fully utilizing ECaTS. All required upgrades to ECaTS will be handled through the statewide contract at no cost to the PSAP.

Outcall Notification Systems

The PSAP currently uses **CodeRed** as their outcall notification system. AT&T will provide quarterly subscriber data for use in this system at no cost. It is important to note that this data's use is limited to the outcall notification system and cannot be used for other purposes.

Other Systems or Applications

No other systems, that interface with the 9-1-1 call flow have been identified that will impact the PSAP's readiness for NG9-1-1.

Rack Space

The AT&T solution requires four units (4U) of rack space in the PSAP equipment/computer room for networking equipment. The rack must also have available electrical connections and be properly grounded. The PSAP has confirmed that this space is currently or will be available.

Coordination with Open Grants

The PSAP does not currently have any open grants.

GIS Data Preparation

GIS Data Sources

Currently, **Henrico County GIS** maintains all of the GIS data for the PSAP and will be the source for all GIS data required for NG9-1-1 geospatial routing; however, other departments within the locality may contribute data or manage various processes. It is the responsibility of the GIS department to aggregate the GIS data required for the PSAP and NG9-1-1.

Locality GIS Data Readiness

Geospatial data drives the routing of NG9-1-1 calls. It is imperative that road centerline and address point data layers are highly accurate and well maintained. In 2016, VITA conducted an analysis of these data against the existing automatic location identification (ALI) database and master street address guide (MSAG) to help determine readiness and provided a report to each PSAP of the results. This analysis has been repeated making adjustment to the logic to ensure it matches the methodology used by AT&T in their analysis. The goal is to have 98% of all addresses in the current ALI database geocode against the locality's road centerline data layer. Once the 98% threshold recommended by NENA is met, the PSAP is ready to deploy NG9-1-1. Since matching to the address point is more accurate, VITA is recommending the additional goal of matching 98% of ALI database addresses when geocoded against the address point data layer. If either of these goals in not achieved, then GIS data work must be completed to meet or exceed these goals. While financial support from the PSAP grant program may be available to fund this work, localities with GIS programs will be encouraged to make the necessary corrections in house if resources and time before deployment permits.

These are preliminary results based on expected data criteria of AT&T, and will be retested directly by AT&T after the execution of the participation agreement. This analysis provides the PSAP and their GIS support with an estimate of the extent of potential errors and helps identify the issues that need to be

resolved. ISP staff including a GIS analyst and/or regional coordinator will begin working with the GIS data maintenance provider (internal or external) to identify and correct the GIS data or ALI data and achieve a higher match rate and thus more accurate geospatial routing.

Though there are other types of errors that may exist in the GIS data used by the PSAP (such as parity or cartography errors), these do not usually impact the routing of a 9-1-1 call. As a result, as part of this effort, only corrections that impact routing the 9-1-1 call will be required. PSAPs, in coordination with their GIS support, are encouraged to look more broadly at their data and work to improve its overall quality as well.

The 2018 MSAG/ALI/GIS analysis for the PSAP determined the current match rate to be as follows:

- Road Centerline (RCL) – **89.4%**
- Address Point – **88.8%**

The primary issue with the RCL data is differences in street names between the ALI and GIS data. Correcting the street names so they match would increase the match rate for RCL to **90.8%**. The analysis also determined that no more than ten addresses were responsible for many of the address point discrepancies. Resolving no more than ten addresses will increase the result to **90.5%**. During July 2018, VITA will send each PSAP and/or GIS manager a report detailing this analysis, and identifying the specific ALI records that could not be matched to the RCL or address point data. To resolve these ALI address discrepancies, there are potentially four actions that will need to take place:

1. **Add a record to the GIS** – When the ALI database has correct addresses that have not been added to the GIS data, the addition of data needs to occur. This may entail adding a road segment to the RCL or a point to the address points.
2. **Change attribution in the GIS** – When an ALI record has a correct address but the RCL or address point attribution is incorrect the discrepancy in the GIS data must be resolved. A common issue is a difference with the street name or street type between the ALI and the GIS data. Often, this issue can be corrected using a batch script process. VITA staff can assist.
3. **Change attribution in the ALI database** – When the RCL or address point has the correct address but the ALI record is incorrect, the discrepancy in the ALI database may need to be resolved. Again, this is often caused by differences in the street name or street type between the records. If necessary, AT&T can make batch changes as they load the ALI database into the ESInet.
4. **Determine that the discrepancy is not an error** – There are often ALI records associated with telephone numbers that can never actually dial 9-1-1. They could be pilot numbers for a multi-line telephone system, foreign exchanges or shell records for wireless calls. While many of those records were filtered out of the analysis, some may still be within the data. These ALI records need to be identified and removed from the match rate calculation. VITA staff will assist with this process.

In addition to the requirement for ALI address matches, there are five GIS data reviews that AT&T conducts on the GIS data to ensure there are no errors that would cause issues or uncertainty when routing a 9-1-1 call. As an example, duplicate GIS data could cause a search for an address to result in two or more matches. Since certainty of a location is important, checks are performed to ensure no duplicate data exist. The following is a list of the additional analyses performed and the number of records that were found to be in error that will need to be corrected:

- Road centerline has duplicate address ranges - **2**

- Road centerline has right or left side overlapping address range - **1**
- Road centerline has street name attributes not meeting Virginia, USPS, & NENA standard - **435**
- Address point Is duplicate, has no street name, or no address number - **55**
- Address point street name and road centerline street name mismatch - **56**

All of these errors will be also included in the analysis delivered to the PSAP and GIS Manager in July 2018. This includes geospatial data identifying each specific error that can be viewed in ArcMap. Utilizing this information will assist in error identification and correction.

Regardless of how they are resolved, **Henrico County** will need to resolve these issues through internal resources, at least 3 months prior to the targeted deployment date.

PSAP Boundary

This is a GIS polygon data layer that defines the area of responsibility for each PSAP. The PSAP boundary must be agreed to by all adjoining PSAPs, thus its development must be a regional effort. VITA ISP will support the regional development and maintenance of a statewide PSAP boundary. This PSAP boundary layer is essential to routing 9-1-1 calls based on caller location by either civic address or coordinate location. This layer must not have gaps or overlaps to ensure correct call routing. VITA will develop a best practice to guide each PSAP through this process, which can also be facilitated by the VITA ISP regional coordinator.

Authoritative GIS Data Source Boundary

This polygon layer defines the area of authoritative GIS data sources, with no unintentional gaps or overlaps. The boundary must be agreed to by all adjoining data provisioning providers. Edge-matching conformance is ensuring that one and only one entity is responsible for maintaining each piece of GIS data within a PSAP. Within a PSAP boundary, there may be multiple sources for authoritative GIS data as a combination of cities and counties. The GIS sources within the PSAP need a common and agreed-upon understanding for the maintenance of each feature and the provisioning boundary of responsibility. Making sure there is agreement of that point and ensuring each locality is only providing data where they are the authoritative GIS data source are the purpose of this assessment. External edge-matching conformance addresses boundaries between neighboring PSAPs to ensure that there are no overlaps or gaps in the maintenance of GIS data. Geometric features need to meet at the agreed upon boundary.

MSAG transition/confirmation

In order to accommodate originating service providers (OSP) that are not fully i3 capable, AT&T will maintain a master street address guide (MSAG) as part of the NG9-1-1 solution. While the existing MSAG can be used and maintained, generating a new MSAG from local GIS data is a better solution since existing GIS data is generally of superior quality than the MSAG. To use GIS data to generate the MSAG, an emergency service number (ESN) data layer must exist or be created. The PSAP has **one ESN** for their area of responsibility. **Henrico County** GIS does not maintain an ESN boundary layer depicting this area. Since this layer is the same as the PSAP boundary layer it will be created at the same time. Once it is, they can utilize a GIS generated MSAG with the migration to NG9-1-1.

Ultimately, ESN and community name need to be attribute fields in the address points and road centerlines layers to support call routing until the OSP can transition to i3. If these attributes are not part of a locality's existing maintenance workflow or GIS database, they can be created by building a separate polygon layer and transferring these values to the centerline segments (commonly referred to as a spatial join). The spatial join method can be implemented as part of the workflow for preparing to transfer GIS data to AT&T to ensure these fields are accurately populated.

GIS Ingest Readiness

Localities may choose to implement AT&T tools and workflows for ongoing maintenance of GIS data, or may choose to continue using internal workflows or third-party support services. As GIS data is updated, regardless of the tool set or service provider, the GIS datasets must be provided to the spatial interface (SI). The SI provisions the updated GIS data to drive location validation and call routing functions in the ESInet.

Localities choosing to adopt or transition to the AT&T toolset will have a defined workflow for providing updated GIS data. Localities wishing to use existing tools, acquire third-party tools, or rely on a service provider will need to ensure the workflows are in place to accept and resolve discrepancy calls (formalized requests to update GIS datasets), and periodically transfer updated GIS datasets to the AT&T spatial interface. This section will establish the path and milestones for completing this work.

Data maintenance Workflow/Procedures

The quality of GIS data diminishes over time unless it is properly maintained. It is important that localities document GIS data maintenance workflows and validations to ensure synchronization across GIS layers. This can include periodically ensuring conformance of edge matching of GIS data at shared boundaries. VITA has confirmed that the GIS organizations supporting the PSAP have appropriate internal data maintenance procedures/discrepancy management workflows.

Call Routing

The ultimate goal for all PSAPs is to use geospatial (i3) routing for all 9-1-1 calls. This solution uses all the NENA i3 standards for delivering voice and data directly into the PSAP's CHE. 9-1-1 call routing is based on the PSAP-provided GIS data. The ESInet router hands off the call to the PSAP networking equipment (router or firewall). The PSAP's CHE must be able to receive the voice call via SIP. Location data delivered via SIP using PIDF-LO, and would perform all the i3 protocols such as LoST and HELD.

If the PSAP's CHE is not NG9-1-1 capable or the geospatial data is not ready for deployment, a PSAP can still connect to the ESInet with an interim solution for call delivery. This will allow the PSAP to migrate on schedule, and they can implement geospatial (i3) routing when the GIS data is suitable for this use and the CHE is i3 capable.

The two interim solutions are as follows:

> **Legacy PSAP Gateway** - This solution allows the PSAP to be connected to the ESInet through a network gateway. In this call delivery configuration, the call is routed with the legacy MSAG and ALI data, however this is done over the IP network. Once the call reaches the gateway, the voice data is converted to analog and processed over an analog voice circuit to the PSAP's CHE. This does not require any upgrade to the CHE and as mentioned uses a legacy ALI lookup. The ALI lookup would use a standard serial connection (in this case to the legacy PSAP gateway placed in the PSAP) to retrieve location information.
>
> **Transitional SIP** - This solution uses an IP (SIP) connection to get the voice call directly into the PSAP's CHE. The ESInet router passes the call to the PSAP networking equipment (router or firewall). The PSAP's CHE must be capable of receiving the voice call via SIP. The CHE would still use a legacy ALI lookup. The ALI lookup would use the standard serial connection (in this case to the ESInet routers) to retrieve location information. MSAG and ALI are still used to conduct the routing.

Again, the ultimate goal for all PSAPs is to geospatially route all 9-1-1 calls. If the geospatial data meets the accuracy goals, a PSAP should be able to deploy NG9-1-1 with geospatial routing. If for some reason, this cannot be accomplished, interim solutions are available to allow the PSAP to deploy on schedule, and they can convert to geospatial routing later.

Based on an assessment of the CHE and GIS data, geospatial routing can be implemented initially with NG9-1-1 and no interim solution will be necessary. While some GIS data correction must take place, the PSAP is committed to correcting those issues well in advance of the required milestone and to maintain that data through the transition period.

Call Transfers

During the transition to NG9-1-1, the AT&T ESInet will be interconnected with all selective routers from Verizon and CenturyLink to ensure that calls received by PSAPs that have deployed NG9-1-1 can be transferred to PSAPs on the legacy E9-1-1 network and vice versa. No ability to transfer calls will be lost during the transition when neighboring PSAPs may be on different networks.

Post deployment, all Virginia PSAPs should be on an ESInet and should be able to transfer calls among PSAPs with accompanying location data. Even if more than one ESInet is deployed from different solution providers, the goal is that they are interconnected and calls can be transferred between them.

Network

The NG9-1-1 solution offered by AT&T is a service; therefore, the network is provided as part of that service. However, there are several issues impacting the network that may be outside of this service that must be considered. The configuration of the PSAP's connection to the network will be based on the legacy E9-1-1 network information as follows:

- Legacy E9-1-1 service provider: **Verizon**
- ALI database provider: **Verizon**
- Selective router pair(s): **Chester/Richmond Stuart**
- Trunk counts (all): **35**
    - Wireline: **12**
    - Wireless: **12**
    - SIP: **0**
    - Administrative: **11**

The NG9-1-1 network will be designed to support the same number of concurrent 9-1-1 calls as can be supported on the legacy network (wireline and wireless trunks). The PSAP can designate what happens to calls that exceed this number. This setting is determined in the PSAP CHE, but the options will be discussed with AT&T during system configuration. The options include providing the caller with a fast busy signal, routing the call to another PSAP, or overflowing the call to another line. As a best practice, VITA ISP recommends routing the call to a fast busy signal or rerouting calls to another PSAP.

Redundancy and Diversity

In order to provide 99.999% availability of the NG9-1-1 service, each PSAP must have diverse and redundant IP connections to the ESInet. Having redundant connectivity means having two connections, but they could be co-located or follow the same path. Having diversity means that those redundant connections follow different paths that never touch from origin to destination. To achieve the 99.999% availability, diverse connectivity is planned for all PSAPs. There is a chance the diversity is simply not

available to all PSAPs. AT&T has conducted a diversity study for each PSAP and the results for the current location of the **Henrico County** PSAP are as follows:

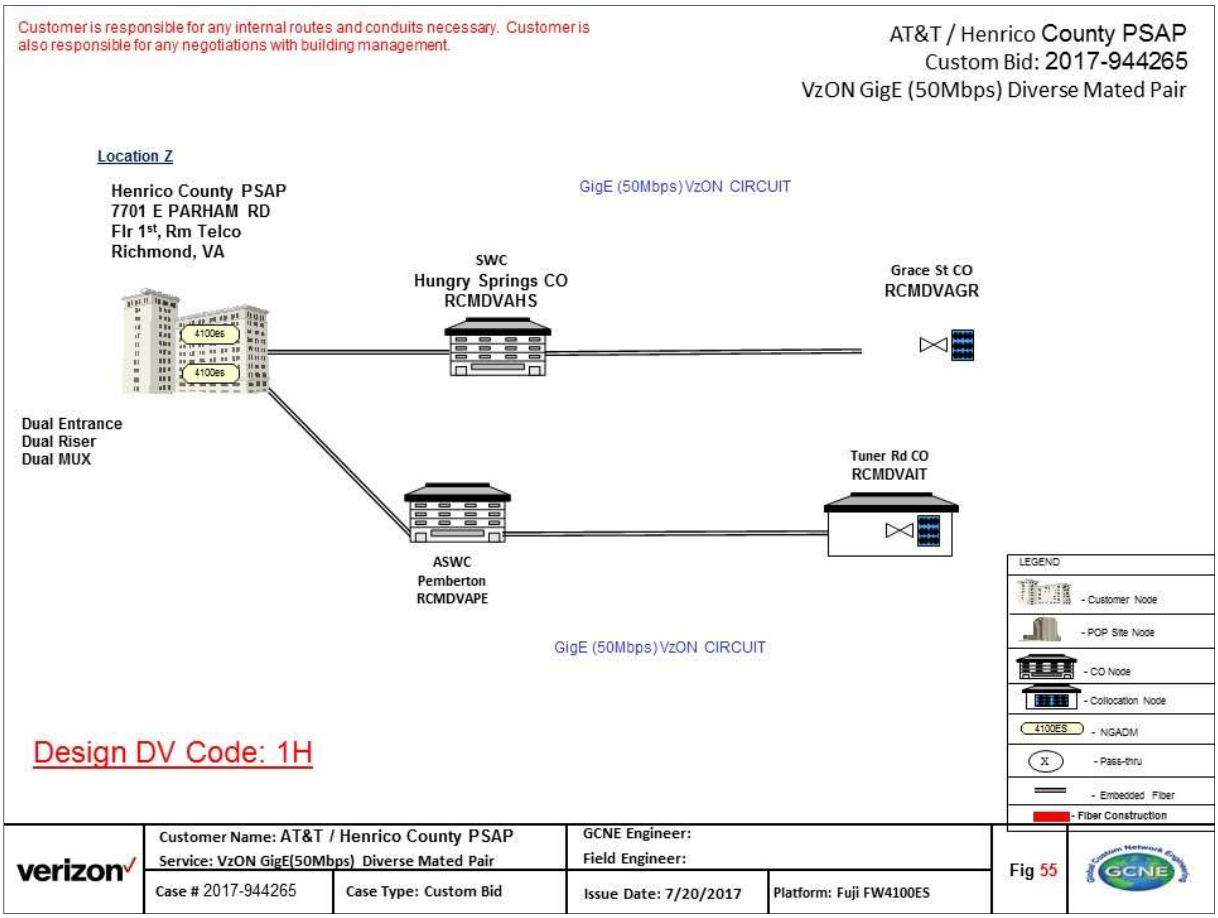

The total cost for this diverse connectivity is **$18,306.46**, which will be provided by the Board as part of the PSAP's funding submission. The timing of the implementation of the diverse connectivity may not be completed until after initial NG9-1-1 deployment.

Disaster Recovery

Though the NG9-1-1 solution is designed to provide 99.999% availability, disaster recovery plans still need to be in place for instances when the network becomes unavailable or the PSAP is otherwise inoperable (evacuation, structural damage, etc.). Broadly, when the PSAP must be abandoned, there are two approaches to disaster recovery, a) having a backup PSAP within the locality or b) partnering with a neighboring PSAP to take the calls. Additionally, if only the network is impacted and the PSAP is still operable, 9-1-1 calls can be forwarded to a 10-digit telephone number in the same PSAP. Location data is lost, but that call can still be answered and processed.

Currently, the PSAP has a disaster recovery plan, which states that if the PSAP must be evacuated for any reason, or network be unavailable and the PSAP can still be occupied, calls are rerouted to **Richmond City PSAP.**

Based on the current disaster recovery plan, no additional steps must be taken in order for this plan to continue to be viable with NG9-1-1. The PSAP need only inform AT&T of their disaster recovery plan during the detailed planning after the participation agreement is signed. AT&T will then build those routes in the configuration files both for during the transition and post-migration to NG9-1-1.

While support will be available to maintain the current disaster recovery capability for the PSAP, it is important to note that there are aspects of disaster recovery that are beyond the scope of this migration proposal. As an example, while the NG9-1-1 network can be configured to route calls to a neighboring PSAP in the event of a PSAP evacuation, getting the 9-1-1 call to another PSAP to be answered is only part of the dispatching process. The call for service then needs to be sent to first responders through a radio channel or mobile data. Assuming that capability already exists, nothing about the deployment of NG9-1-1 should impact that. In cases were disaster recovery does not exist currently, this migration proposal only deals with getting the 9-1-1 call routed to another PSAP (backup or neighboring) and does not address radio or CAD interoperability needed to effect the dispatch of first responders. VITA ISP can assist with that process, but outside of NG9-1-1 deployment. Additionally, VITA ISP can assist with the exercising of disaster recovery plans, which should be done at least once a year to make sure they are fully functional when needed.

Secondary PSAP

There are no secondary PSAP(s) identified within the service area of the primary PSAP.

Network Security

AT&T employs a defense-in-depth security strategy to protect sensitive information. Security mechanisms are deployed throughout the service in addition to the multi-layered security provided by the network itself, in order to provide seamless and effective security. AT&T's world-class experience in both IP and Telephony Security provides the following key security elements.

- Availability of the VoIP Service: Stop denial or deterioration of service functionality
- Integrity of the VoIP environment: Prevent system functions or data from being corrupted
- Confidentiality and Data Privacy in VoIP: Keep information secure and private

The AT&T IP/MPLS Converged Network deploys the same attention to state-of-the-art security measures as have been provided on traditional PSTN networks:

- AT&T Security Policy and Requirements (ASPR) and AT&T OneProcess provide the security foundation.
- AT&T Internet Protect helps protect against worm/virus attacks and offers DoS (denial of service) protection.
- A 24x7 Security Network Operations Center (SNOC).
- AT&T MPLS Voice Aware Network provides security and QoS.
- AT&T Global Fraud Management System protects AT&T VoIP against fraud.
- AT&T hub-and-spoke MPLS VoIP VPN for customer access helps to provide security and QoS for AT&T.

In the AT&T MPLS network, customer services are provisioned on specific interfaces of an MPLS VPN by using known IP addresses. This approach enables AT&T to authenticate users and traffic. Rather than supporting signaling or voice encryption, AT&T relies on the MPLS security and secured IP tunnels to provide confidentiality for signaling and voice.

The data privacy and data integrity of an MPLS VPN is not dependent on encryption or address space-based access controls. AT&T protects the core network against compromise by:

- Hardening the routers and turning off unnecessary services.
- Implementing TACACS+ authentication, authorization and accounting for router access/commands.

- Automated provisioning of router configuration driven from ordering systems, to minimize human error, complimented by daily discord reports and investigation.
- 24/7 monitoring and DoS mitigation tools.
- Route dampening and/or limiting total number of routers learned to protect routing stability.
- Firewalls, IDS, token based authentication, encrypted remote access for network and service management systems/work centers.

The AT&T security culture assures that these architectural protections are enforced by audits, employee awareness training, penetration testing and enforcement of architectural principles and policy.

In addition, AT&T MPLS VPN service is a transport only service, with the data integrity and data privacy protection as described above. AT&T monitors the core network for traffic anomalies and shared resource consumption thresholds to protect the core network and assure that traffic storms do not impact the performance of other customers. AT&T network management and service management systems are hardened, require authentication and authorization control, and are instrumented with intrusion detection to assure that they are not compromised, and cannot serve as a vector to attack the network or customers.

Schedule for Deployment

A clear and accurate schedule is essential to ensure cost effective and coordinated deployment throughout the Commonwealth. For that reason, this section identifies all milestones that must be met in order to successfully deploy. To manage costs, a six-month deployment window has been established for each selective router pair regardless of whether the PSAPs choose the AT&T or another NG9-1-1 solution. The following chart identifies the deployment periods for each selective router pair:

Selective Routers	9-1-1 Service Provider	Population	Time Period
Fairfax/Alexandria	Verizon	2,494,184	January 2019 – June 2019
High St Portsmouth/Jefferson	Verizon	1,662,247	July 2019 – December 2019
Stuart/Chester	**Verizon**	**1,660,182**	**January 2020 – June 2020**
Charlottesville/Farmville	CenturyLink	403,369	July 2020 – December 2020
Fredericksburg/Winchester	Verizon	343,031	July 2020 – December 2020
Danville/Lynchburg Church St	Verizon	320,247	July 2020 – December 2020
Staunton/Salem	Verizon	453,065	January 2021 – June 2021
Shenandoah County ECC	Shentel	43,175	January 2021 – June 2021
Covington	Ntelos	21,556	January 2021 – June 2021
New Castle	TDS Telecom	5,158	January 2021 – June 2021
Floyd County	Citizens	15,651	January 2021 – June 2021
Monterey-Highland Telephone	Highland Telephone	2,216	January 2021 – June 2021
Blacksburg/Norton	Verizon	340,101	July 2021 – December 2021
Johnson City/Wytheville	CenturyLink	338,311	July 2021 – December 2021

The **Henrico County PSAP's** deployment window will be **January 2020 – June 2020**. A specific date will be determined after all PSAPs have made the NG9-1-1 decision and AT&T develops the master schedule. Regardless of the specific date, any CHE upgrades, diverse connectivity enhancements and GIS data corrections must be completed at least **three months** before the deployment date. If they are not completed by this date, migration can still occur on schedule, but it will require the deployment of an interim solution instead of full i3.

Cost Estimates for NG9-1-1 Funding

The 9-1-1 Services Board has committed to funding the transitional costs for NG9-1-1 deployment so it is important that all such costs are identified and made part of the overall budget. It is also important that the funding be provided on a fair basis across all PSAPs in Virginia. While most costs will be fully funded, others like replacement of non-vendor supported CHE will continue to be funded at the same levels as has been provided through the PSAP grant program in prior years. Based on all of the information provided in this migration proposal, the following budget is for your deployment of NG9-1-1:

Category	Amount	Notes
NG9-1-1 non-recurring cost	$4,000	Flat rate from AT&T
CHE upgrade	$15,000	i3 licenses and services
CHE replacement	$150,000	Replacement planned for FY22
Text-to-911	$0	Deployed direct-IP text to 9-1-1
CAD upgrade	$0	Not required
Mapping upgrade	$0	Not required
Voice logging upgrade	$0	Not required
ECaTS Data analytics expansion	$1,000	i3 logging and text to 9-1-1
Other system upgrades	$0	Not required
Rack space	$0	
Diverse connectivity costs	$18,306.46	
Disaster recovery upgrade	$0	Not required
Secondary PSAPs	$0	None
GIS data preparation	$0	
Legacy 9-1-1 transition costs	$80,781.60	Verizon costs
Project management assistance	$0	None requested
Total	$269,088.06	

The monthly recurring cost for the AT&T solution is **$37,631.40** which is set for the ten-year term of the Fairfax County contract. The current monthly recurring cost for the legacy E9-1-1 solution is approximately **$23,266.22**. The estimated monthly increase to the PSAP after deployment is approximately **$14,365.18**. This increase will be covered by the Board for a period of 24 months after deployment is complete. At the end of this period, the entire cost will be the responsibility of the PSAP. Copies of invoices from the current 9-1-1 service provider must be provided to substantiate the current monthly cost. This will be the basis for determining whether monthly funding is provided and in what amount.

The monthly recurring cost is impacted by the bandwidth into the PSAP. Bandwidth is primarily impacted by the number of concurrent calls each PSAP wants to be able to process. As the PSAP grows and adds bandwidth to handle more concurrent calls, the increased monthly cost will be the obligation of the PSAP even if during the 24 months following transition. Additionally, the recurring maintenance costs for PSAP equipment and GIS data will remain the responsibility of the PSAP.

Projected Board Funding

The Board will begin awarding funding for NG9-1-1 in late 2018. Until the Board approves the funding request from the PSAP, all funding levels shown are just projected. Based on the funding guidelines

approved by the Board (or will be approved by the Board), the following funding would be awarded to the PSAP:

Type of Funding	Amount
Non-recurring	$269,088.06
Recurring (over 24 months)	$344,764.32
Data Analytics (monthly)	$415.12

The funding amount shown is based on estimates at this point. As binding quotes are received, the budget will be adjusted. The approval from the Board will be for the specific equipment or services and contingency funding will be available should the final cost be slightly higher so long as the original scope of the effort does not change. Similarly, if the final cost is lower, the budget will be adjusted lower. That additional funding cannot be shifted to another part of the project.

Commonwealth of Virginia
Next Generation 9-1-1

Proposal Acceptance Letter
(PAL)

May 24, 2018

www.vita.virginia.gov

Purpose

The Proposal Acceptance Letter (PAL) functions as the funding request for the NG9-1-1 Migration Program. Primary PSAPs and secondary PSAPs currently served by a selective router pair are eligible to submit a PAL and request funding from the 9-1-1 Services Board (the "Board"). The PAL confirms a PSAP's acceptance of the information contained in their NG9-1-1 Migration Proposal (MP) and signals their intent to deploy NG9-1-1. The PAL should be submitted to the electronic mailbox for the PSAP Grant Program - psapgrants@vita.virginia.gov.

The funding cycle for the NG9-1-1 Migration Program starts on July 1, 2018 and remains open throughout the NG9-1-1 deployment period. The 9-1-1 Services Board will review funding requests received no later than 45 calendar days in advance of each regularly scheduled meeting. A Grant ID and email receipt notification will be sent to the e-mail address listed on the PAL.

The funding amount requested in the PAL should not exceed the recurring and non-recurring cost estimates contained in the MP. After reviewing a PSAP's MP and PAL, the Board will approve funding for specific equipment and services. Contingency funding will be available should the final cost be slightly higher so long as the original scope of the effort does not change. Similarly, if the final cost is lower, the budget will be adjusted lower. This additional funding cannot be shifted to another part of the project. Also, if a PSAP's MP needs to be revised for a material change after it has been approved by the Board, an additional PAL would need to be submitted to obtain any additional funding.

When the Board approves a PSAP's funding request, the PSAP will be expected to execute a contract vehicle with a NG9-1-1 solutions provider within three months of the award date. If a PSAP needs additional time to execute this contract, the PSAP will need to request an extension from the Board. The PSAP will also be expected to complete all identified NG9-1-1 ready implementation steps within three months of the scheduled deployment date. Funding for approved equipment and services may not be immediately available to a PSAP. ISP staff will provide a spending plan, specific to a PSAP's deployment schedule, that details in which year of the deployment period funding will for available to the PSAP.

Local Project Manager (Contact)

PSAP/HOST PSAP NAME: Henrico County

CONTACT TITLE: IT Manager I

CONTACT FIRST NAME: Thomas (Tom)

CONTACT LAST NAME: McLaughlin

ADDRESS 1: Information Technology Department

ADDRESS 2: P.O. Box 90775

CITY: Henrico

ZIP CODE: 23273-0775

CONTACT EMAIL: mcl04@henrico.us

CONTACT PHONE NUMBER: 804-501-5761

CONTACT MOBILE NUMBER: 804-317-2844

CONTACT FAX NUMBER: 804-672-5990

Financial Information

Amount Requested: $ 613,852.38

Date of Completed Migration Proposal: 11/01/2018

PSAP preference for Board payment on behalf of PSAP for incurred eligible NG9-1-1 expenses:

X☐ Yes ☐ No